GV series low pressure vacuum skids

The **GV** vacuum pump skids can integrate into a **liquid ring pump**, a **gas injector** and/or a **mechanical booster pump** having a control system and a recycling system for closed loop liquids.

With no discharge, the vacuum pump skids do not pollute and comply with all the European environmental protection regulations, as well as the ATEX directive.

Permanent cooling efficiently contributes to the system's durability and frees business owners from the constraints linked to installing bulky and costly fire prevention devices.

Taking up the same floor space as a self-lubricating pump, but costing almost twice as less, this new system allows real savings in cost as much as in size, while complying with all the current prevailing standards.

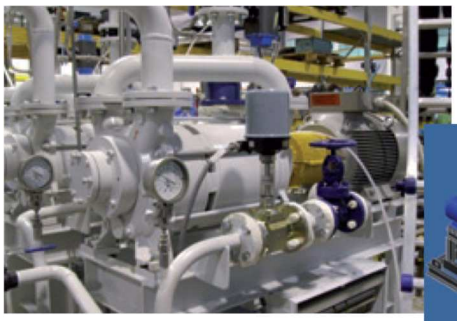

Ex Certified

LIMITS OF USE

- Flow rate: 3 to 50 000 m^3/h
- Operating vacuum: Down to 1 mbar (*liquid ring + injectors*)
  10^{-5} mbar (*liquid ring + Injectors+ Mechanical booster*)

EXAMPLES OF DESIGN

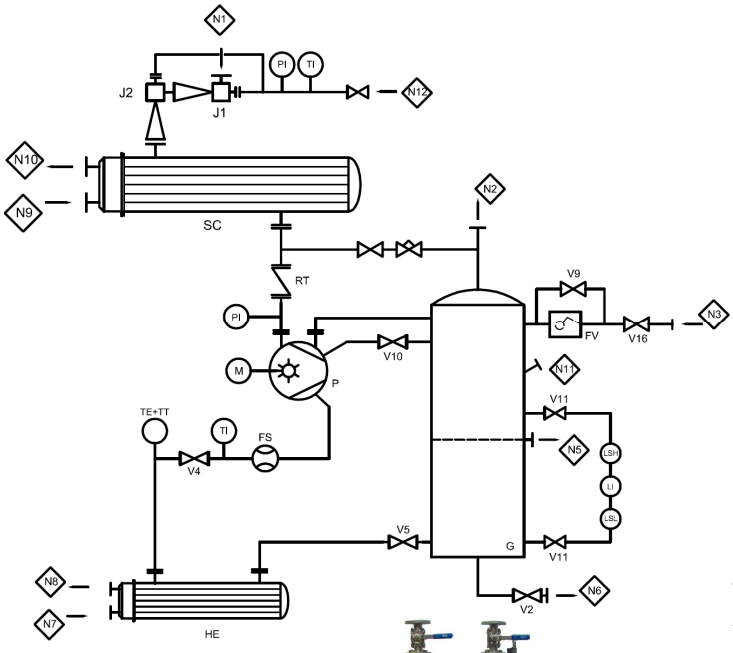

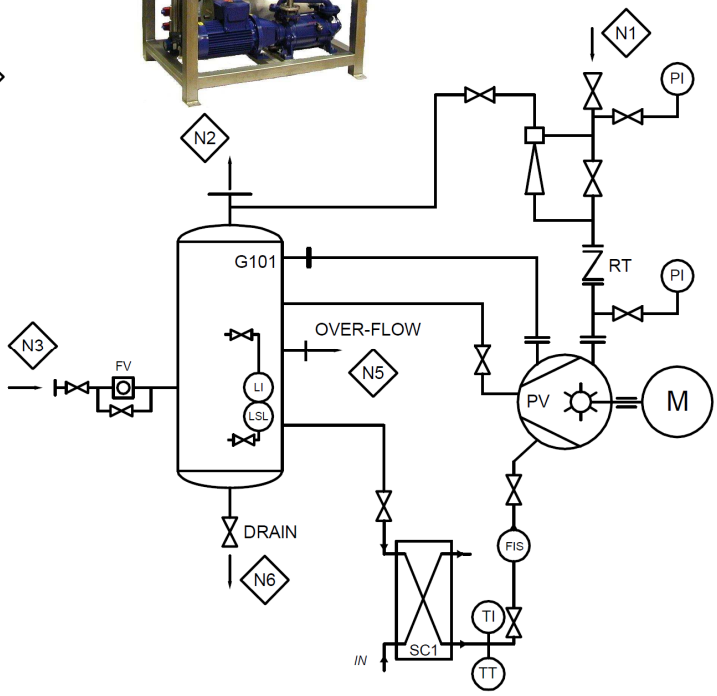

BUSINESS ACTIVITIES AND PRINCIPAL USE

Chemical and fine chemicals industries - Pharmaceutical industry - Cosmetic industry - Paper-making industry - Nuclear industry - Agri-food industry - Vacuum distillation - Packaging - Degassing - Vacuum reactions - Filtration - Pressure conveying...

POMPES GROSCLAUDE

MECHANICAL BOOSTER PUMP

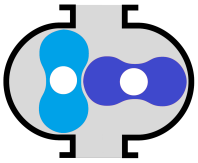

Limits of use

Flow:	200 to 15	m3/h
Vacuum obtained:	10^{-5}	mbar
Differential pressure:	30/130 to 800 (with by-pass)	mbar

Operating principle:

When used with a liquid ring pump, the **mechanical booster pump** allows reaching lower levels. Actually, it functions much like a lobe type blower and permits reaching vacuum levels up to 10-5 mbar.

You can also choose to integrate a by-pass system into the pump that expands the possibilities for use.

LIQUID RING PUMP

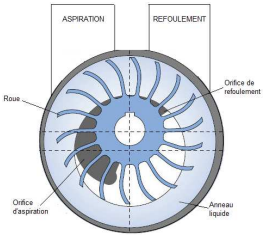

Limits of use

Flow:	≤ 50 000	m^3/h
Vacuum obtained:	≥ 33	mbar
Differential pressure:	Potentially over 1	bar

Operating principle:

The **liquid ring pump** is a pump whose rotor has several blades and is positioned eccentrically within the pump body.

As soon as the pump is started, the liquid forms a cylindrical ring against the inside of the body because of centrifugal force.

As the pump fills, the gas is sucked between the impeller and the liquid ring by the suction inlets.

The liquid compresses the gas between the blades and the liquid ring to assist in its removal through the outlet holes.

While its operating, the pump needs a permanent supply of additional liquid to evacuate the calories created when the gas is compressed.

This type of pump can be used to low pressure or just the opposite: to increase it. The lowest pressure that this type of pump can reach is 33 mbar.

Operating principle:

This type of pumps allows reaching vacuum levels to 33 mbar, but also requires heat removal.

GAS INJECTOR

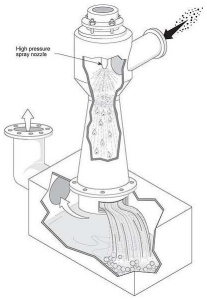

Limits of use

Flow and vacuum obtained:	No limit
Compression factor:	# 10

Operating principle:

An injector is an industrial tool generally used to create a vacuum. It functions using the Venturi effect. A gas is ejected at top speed at the venturi inlet (*generally water vapour*) and suction is produced at the level of the constriction.

POMPES GROSCLAUDE

Parc du chêne - 29, rue du 35ème régiment d'aviation
69 500 BRON – FRANCE
Tel: (33) 4 72 37 94 00
Fax: (33) 4 72 37 94 01
E-mail: info@pompes-grosclaude.com
Web: www.pompes-grosclaude.com

GROSCLAUDE